Cryogenic Engine

The Frozen Thrusters

INTRODUCTION

What is Cryogenics?

- Cryogenics is the science that deals with the production, effects, and behavior of materials at very low temperatures. The term 'cryogenics' originates from the Greek word '**KRYOS**,' meaning '**COLD**,' and '**GENES**,' meaning **'PRODUCED BY**.'
- Cryogenics plays a crucial role in fields like space exploration, medicine (cryosurgery and cryopreservation), and various industrial applications like superconductivity and rocket propulsion.

History of Cryogenic Engines

Early Developments And Milestones

- **CRYOGENIC TECHNOLOGY** began to take shape in the early 20th century. The concept of using liquid propellants for rockets was explored in the **1940s** and **1950s**.
- Significant milestones include the development of the **RL-10** engine in the **1960s**, which was the first cryogenic rocket engine to be used in space. It paved the way for more advanced cryogenic engines, like those used in the Space Shuttle and modern rockets.

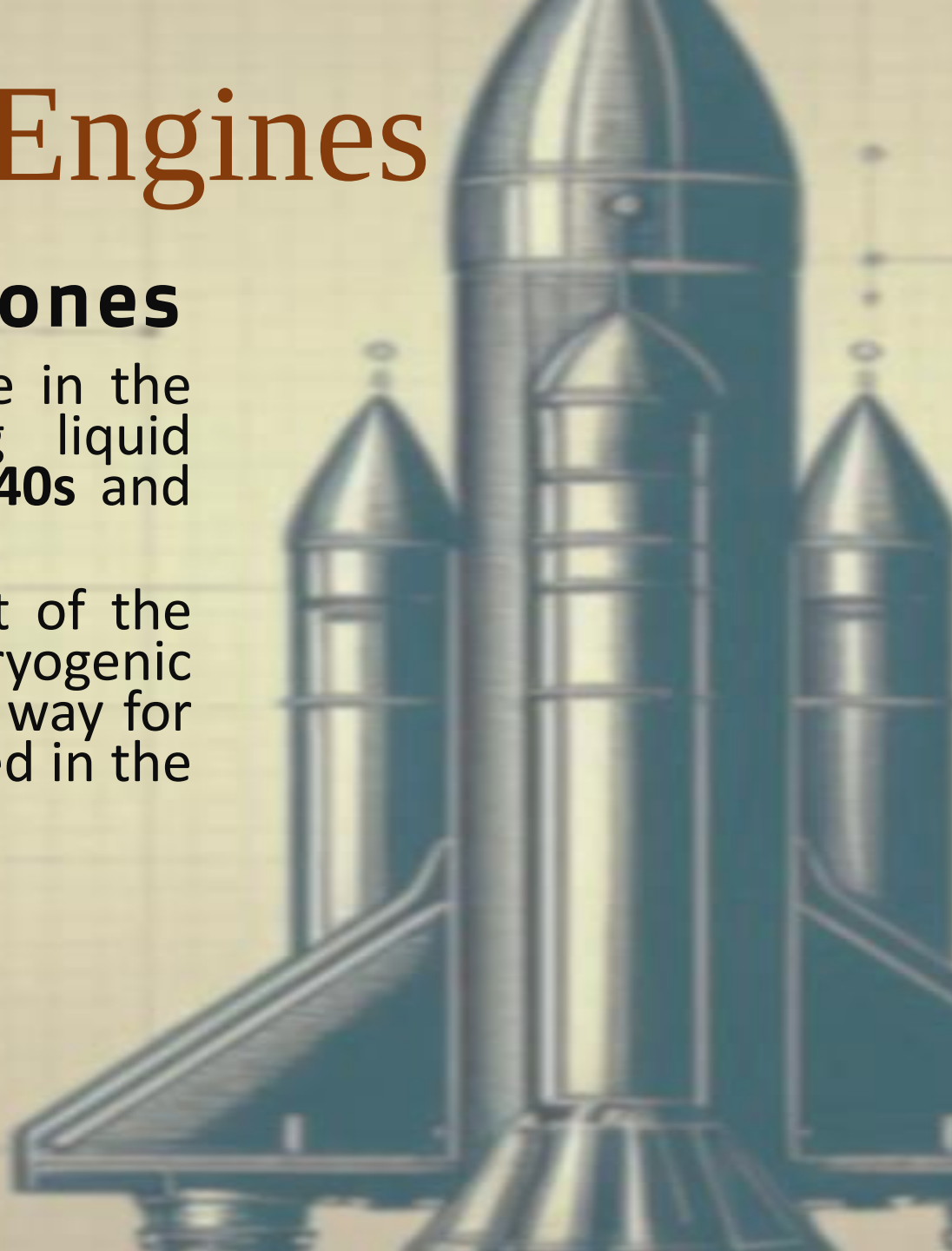

COMPONENTS OF CRYOGENIC ENGINES

- **Turbo Pumps**: These are used to pump the cryogenic propellants from their storage tanks to the combustion chamber at high pressure.
- **Fuel Injectors**: These are responsible for introducing the fuel and oxidizer into the combustion chamber in the correct proportions and patterns to ensure efficient combustion.
- **Combustion(Thrust) Chamber**: This is where the fuel (liquid hydrogen) and oxidizer (liquid oxygen) are combined and ignited, producing high-temperature, high-pressure gas.

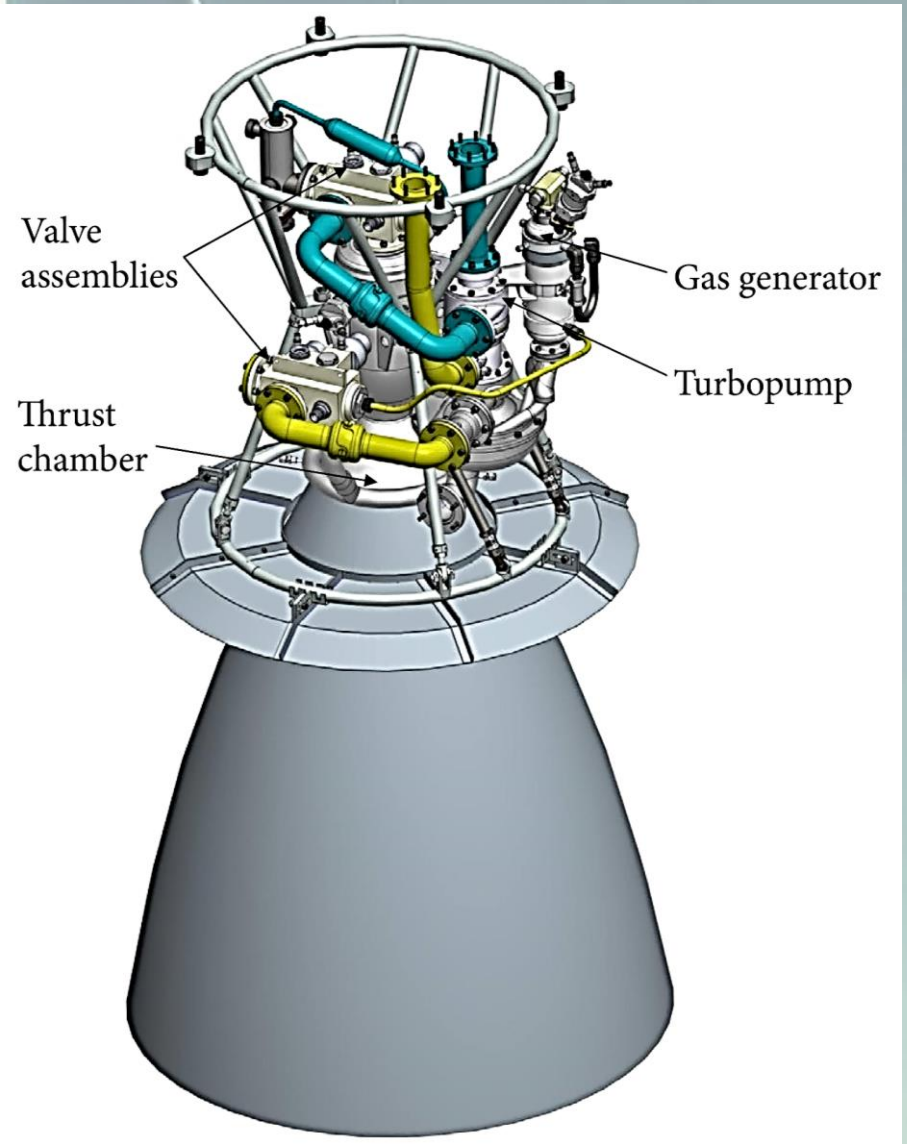

Working Principle

- **Combustion Process**: The fuel and oxidizer are combined and ignited in the combustion chamber, creating a high-pressure gas.
- **Thrust Generation**: The high-pressure gas is expelled through a nozzle at the back of the engine
- **Newton's Third Law of Motion**: For every action, there is an equal and opposite reaction. The expulsion of gas from the engine produces a thrust that propels the rocket forward.

Types of Cryogenic Engines

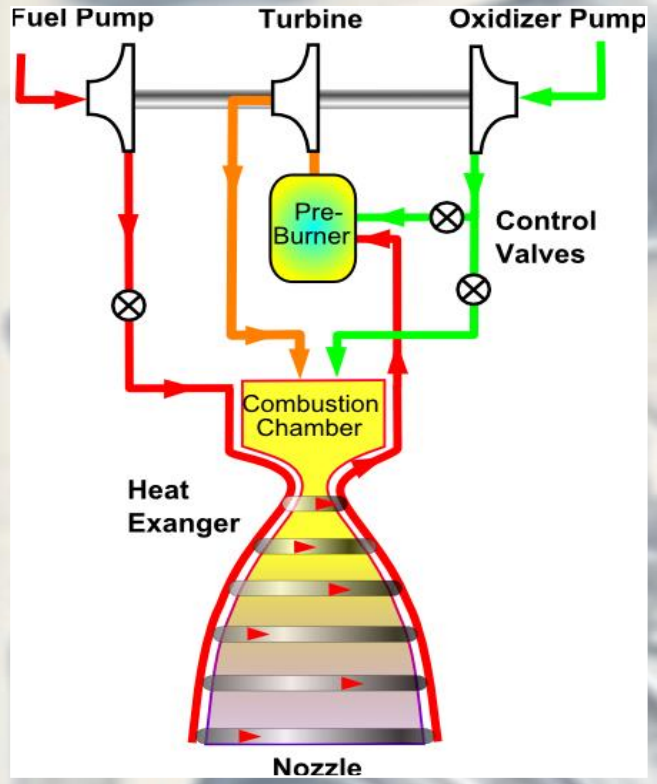

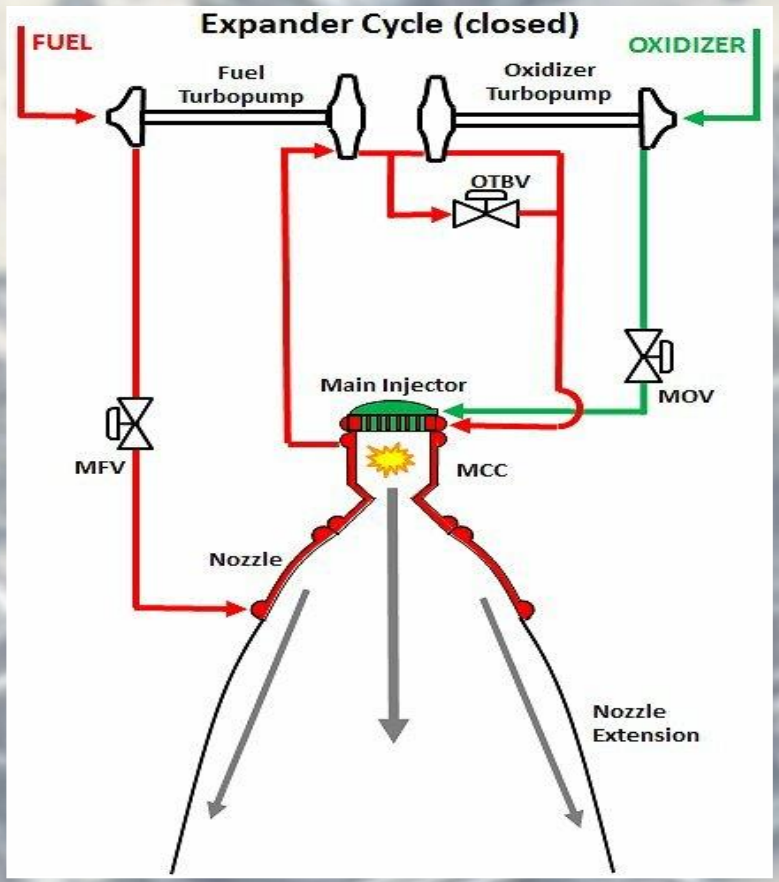

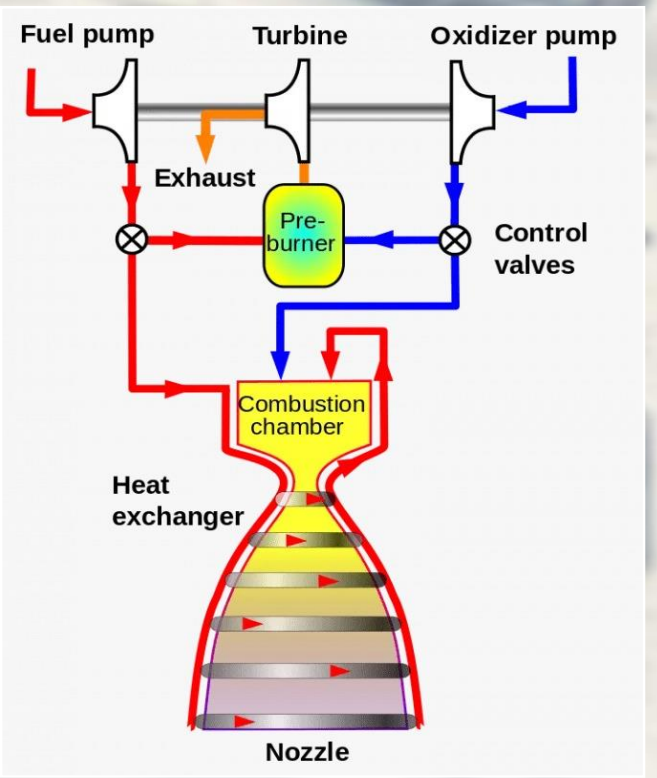

Staged Combustion Cycle: This cycle burns all the fuel and oxidizer in stages, passing through multiple combustion chambers for higher efficiency.

Expander Cycle: This cycle uses the heat from the combustion process to convert the liquid fuel into gas to drive the turbo pumps before entering the main combustion chamber

Gas Generator Cycle: This cycle burns a small portion of the fuel and oxidizer to drive the turbo pumps before expelling the exhaust gases overboard

Applications

- **Space Exploration:** Cryogenic engines are used in rockets that launch satellites and crewed missions into space.
- **Military Uses:** Cryogenic technology is used in missiles and other military applications requiring high energy density.
- **Commercial Aviation:** Research is ongoing to use cryogenic fuels in commercial aviation for greater efficiency and reduced emissions.
- **Medical and Industrial Uses:** Cryogenic technology is also used in medical applications (cryosurgery, preservation) and industrial processes (food preservation, manufacturing).

ADVANTAGES

- **High Energy Density**: Cryogenic fuels have high energy content per unit mass, providing more thrust for less weight.
- **Clean Exhaust**: The primary exhaust product of hydrogen-oxygen cryogenic engines is water vapor, which is environmentally friendly.
- **Efficiency**: Cryogenic engines are more efficient than conventional chemical engines, providing higher thrust and better performance.

Challenges

- **Storage Issues**: Storing cryogenic propellants at extremely low temperatures requires advanced insulation techniques.
- **Handling and Safety**: Cryogenic liquids are hazardous and require special handling procedures to ensure safety.
- **Cost**: The technology and infrastructure required for cryogenic engines are expensive, making them cost-prohibitive for some applications.

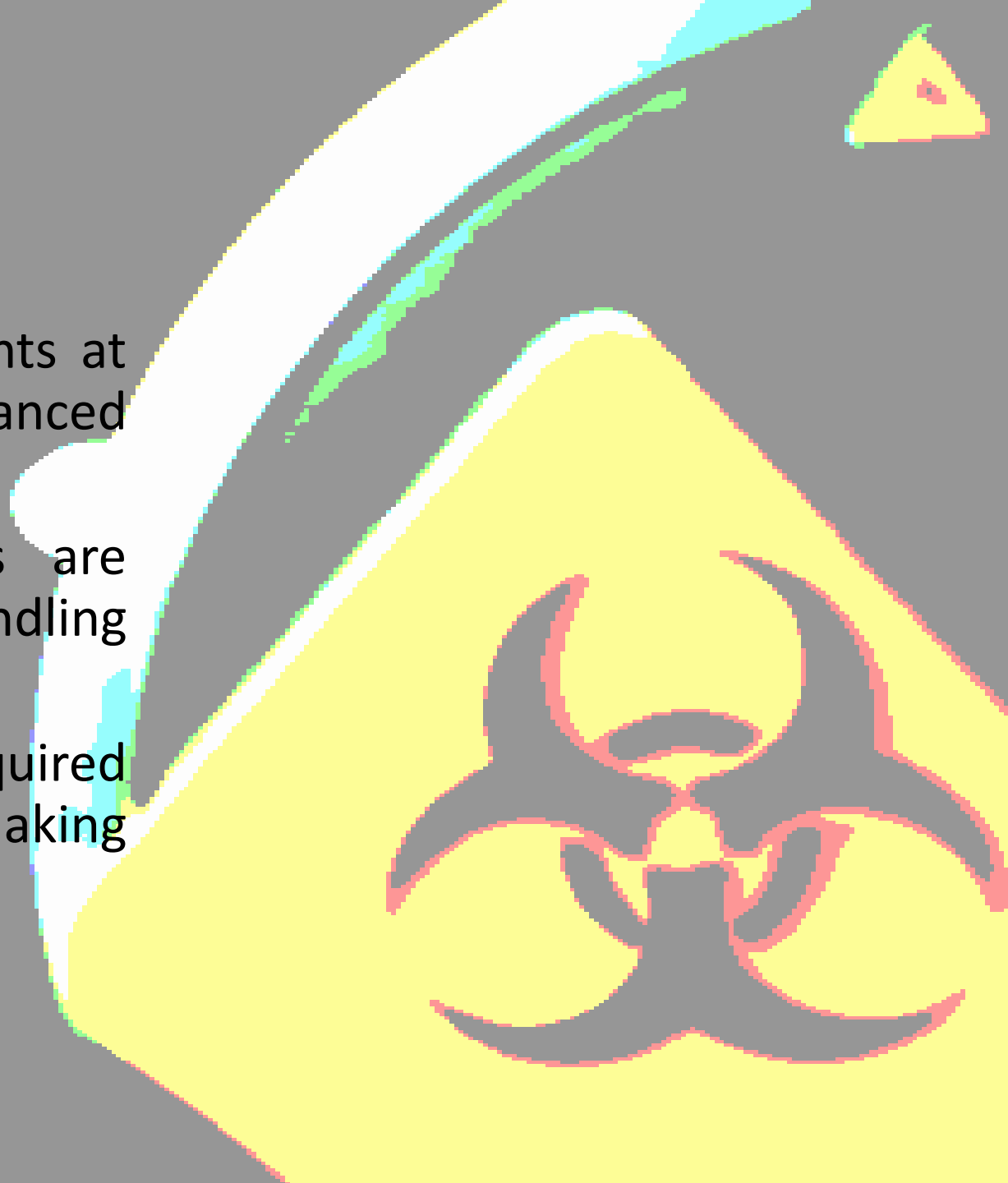

Future Prospects

- **Next Generation Engines:** Research is focused on developing next-generation cryogenic engines with improved performance and efficiency.
- **Innovations in Cryogenics:** Innovations like reusable rocket technology and advanced materials are driving the future of cryogenic engines.

Conclusion

- **Cryogenic engines** are at the cutting edge of rocket propulsion, providing higher efficiency and eco-friendly performance. From space explorations to military uses, their potential is limitless. With challenges in storage and cost, innovation is key. The future looks bright for cryogenics, pushing the limits of what’s possible in aerospace

References

- **Books**: 'Rocket Propulsion Elements' by George P. Sutton and Oscar Biblarz, 'Cryogenic Engineering' by Thomas M. Flynn.
- **Articles**: 'History and Development of Cryogenic Engines' by John Doe, 'Applications of Cryogenic Technology in Modern Rockets' by Jane Smith.